RM Software Slave MPPT Phase Module

Ver 08M2_002
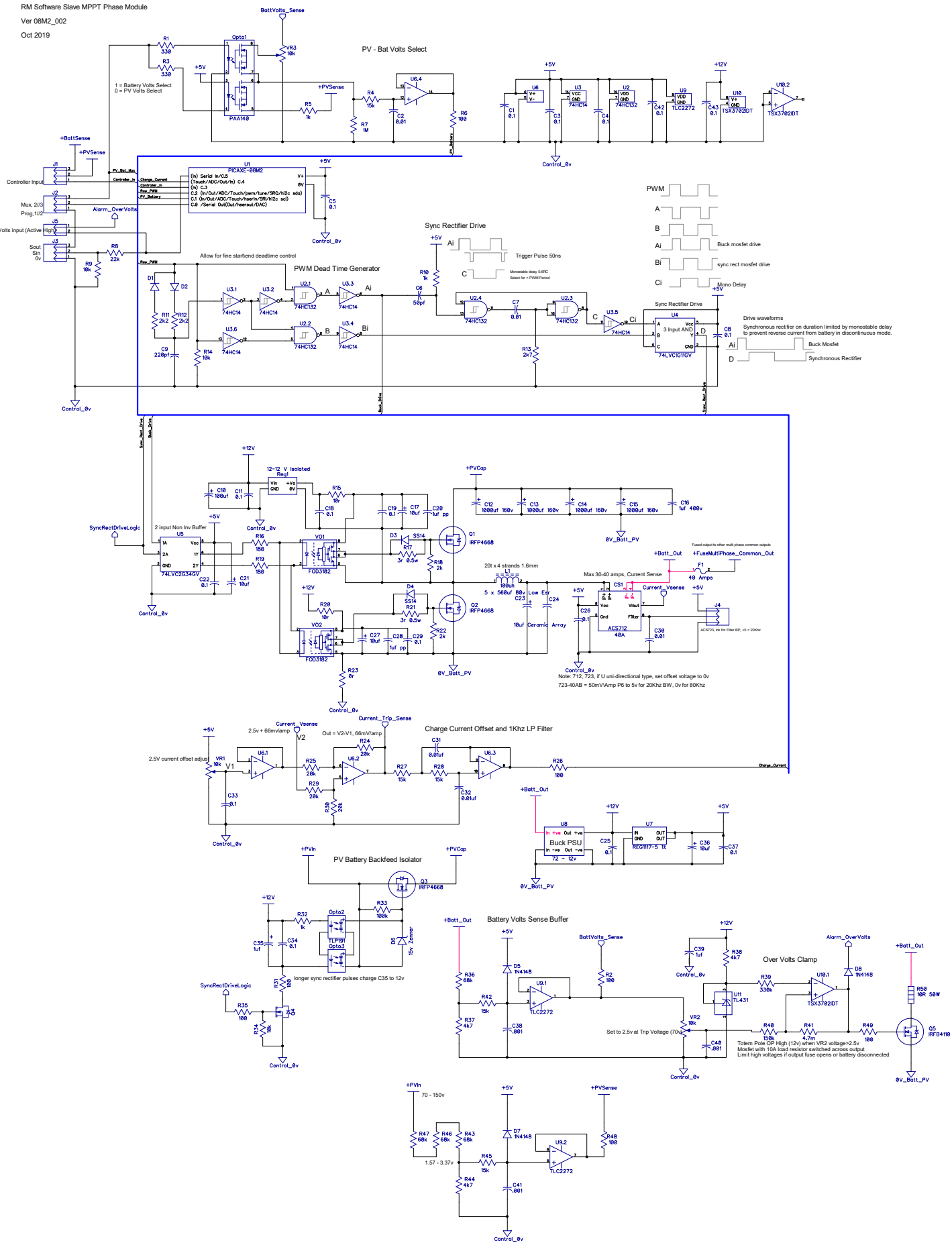
Oct 2019